THE SHOWER LAB

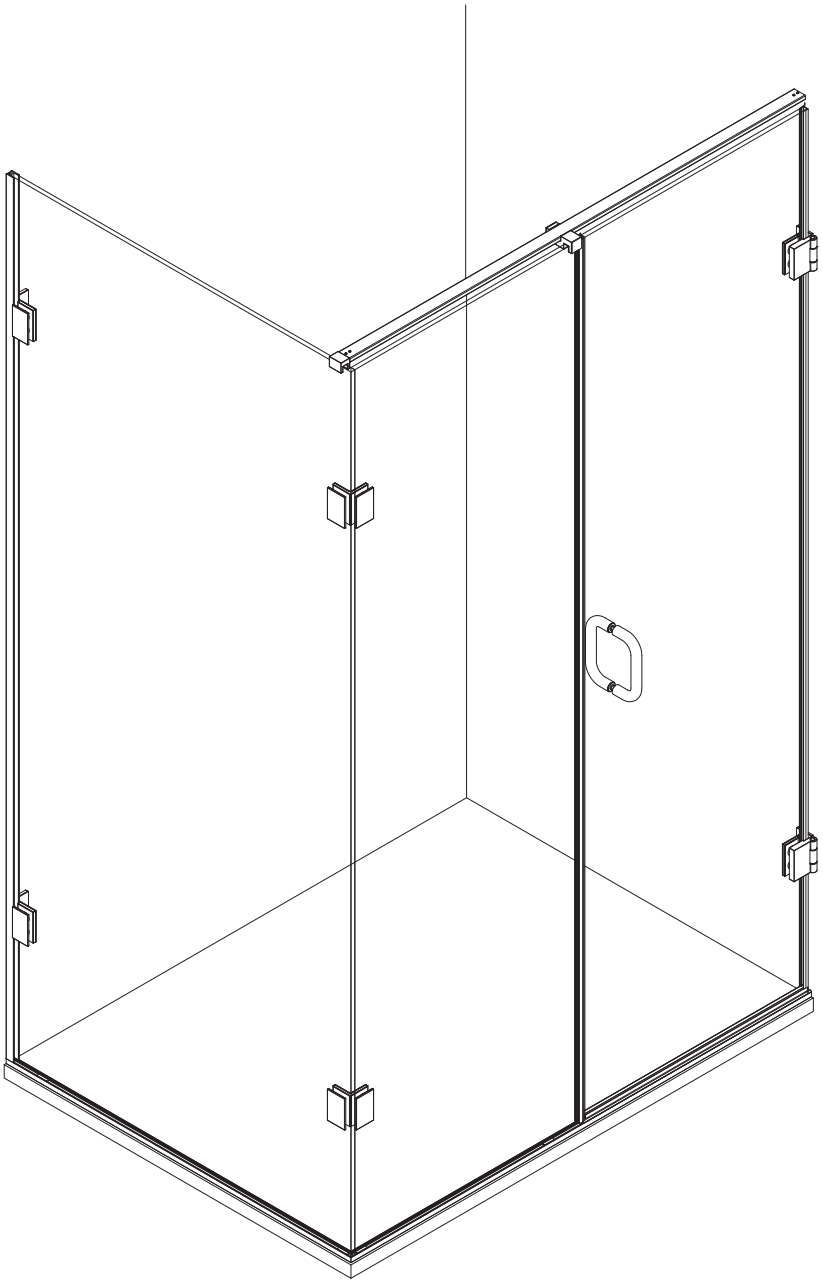

VIEW 07

Illustration - View 07
H1 Handle
Right Hand
Open Out

IMPORTANT

- This shower screen / enclosure must be installed by suitably qualified individuals. We recommend a minimum of two people for safe assembly of certain sections of this screen.
- Ensure all appropriate safety equipment, especially protective footwear, safety glasses and gloves are used.
- When drilling holes in ceramic tiles, use masking tape to prevent the drill from slipping: DO NOT use hammer action as this will crack the tiles. Use a high quality drill bit to ensure a clean, precise hole.
- Tighten hinges and brackets to the recommended **15.6N.**
- Please leave these instructions with the customer following installation.

PRIOR TO INSTALLATION

- Before disposing of the packaging and prior to commencing assembly, please check all the components to ensure that they have been supplied correctly and are undamaged. Subsequent claims for missing or damaged pieces will not be accepted once the packaging has been disposed of and installation commenced.
- In the event of any queries please contact your supplier quoting the relevant model information.
- The Tray / Tiled floor on which this screen is to be installed must be level on all sides.
- It may be necessary to use alternate fixings to those supplied, depending on the properties of the walls to be fixed to.
- Use the protective corners supplied at all times until the glass is moved to its final position.
- Ensure that the glass is installed correctly, taking care to avoid installing the glass upside down. On certain panels an easy clean coating is applied to one side only, this is clearly marked with a sticker on the non-coated side. The coated surface is to be fitted inwards towards the inside (wet side) of the screen.
- Ensure that all surfaces to be sealed are clean and dry prior to applying the silicone sealant. Use a high grade fungal resistant sealant.
- Allow a minimum of 48 hours after application of the silicone sealant prior to using the screen.

TOOLS & MATERIALS REQUIRED

Junior Hacksaw	Modelling Knife	High Quality Silicone Sealant
Straight Edge (Steel Rule)	Spirit Level	Digital Torque Wrench
Fine Tooth File	Pencil	Tape Measure
Set or Roofing Square	Silicone Gun	Pozi-drive Screwdrivers, PZ1&2
Masking Tape	Power Drill	Safety Glasses and Gloves
	Ø6mm Masonry Drill Bit	
	2x Suction Glass Lifters	

CARE AND MAINTENANCE

(please ensure that these instructions are left with the installed unit)

- We recommend routine cleaning of your screen / enclosure with hot water using a soft cloth, then drying with a dry soft cloth or chamois leather.
  Ritec Aftercare for Shower Glass is recomended for best results.
- All glass has been treated with EASY CLEAN glass finish and care must be taken to avoid any abrasive cleaning products that may damage the special surface protection.
- DO NOT use acidic based de-scaler products or products containing bleaches or solvents.

Supplied Parts

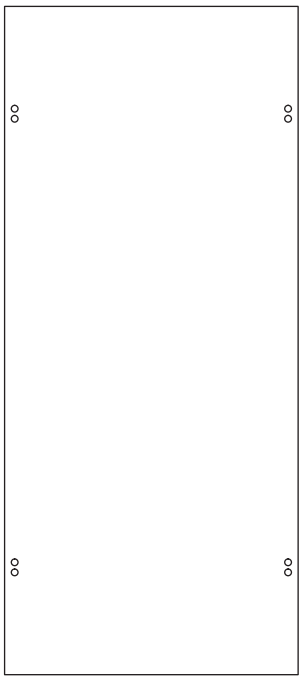

Return panel
x1

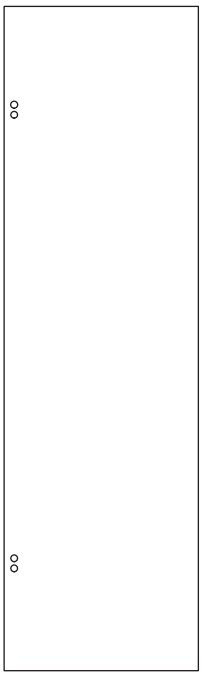

Inline Panel
x1

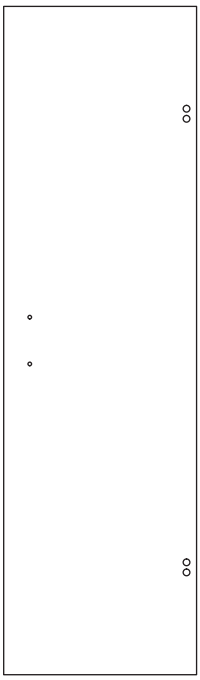

Door
x1

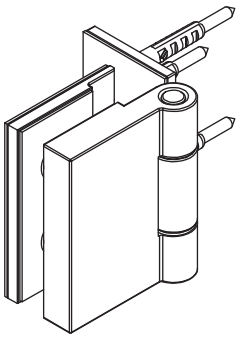

Glass to wall hinge
x2
(Each hinge includes
3x Screws and wall plugs)

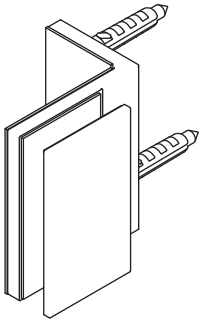

90° Glass to wall bracket
x2
Each bracket includes
2x Screws and Wall Plugs

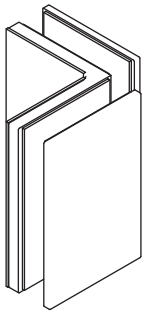

90° Glass to glass bracket
x2

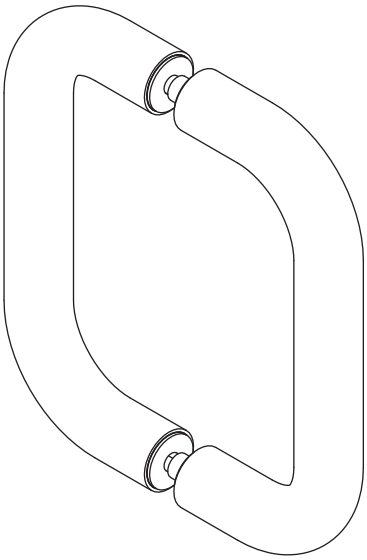

Door Handle
(Option dependant)
x1

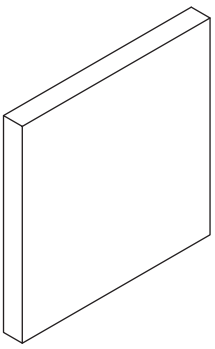

Square Alignment Jig
x1

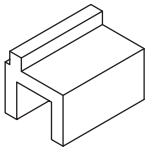

Glass support
x2

90° Corner insert
x1

Supplied Parts

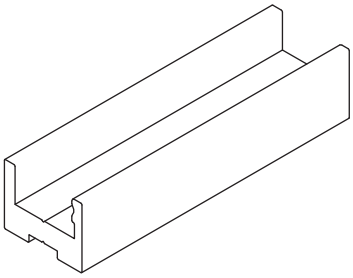

Underframe
x2

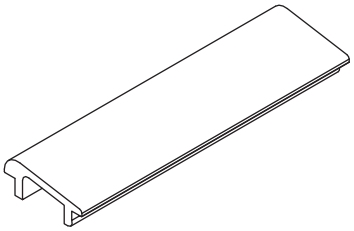

Underframe top
x1

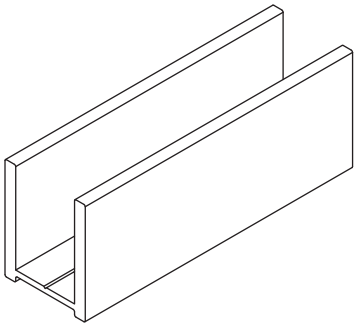

Wall channel
x1

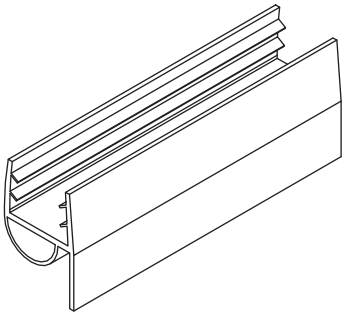

Glass to glass bubble "h" seal
x1

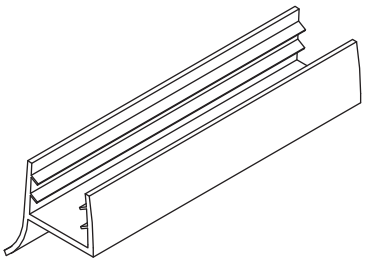

Glass to wall seal
x2

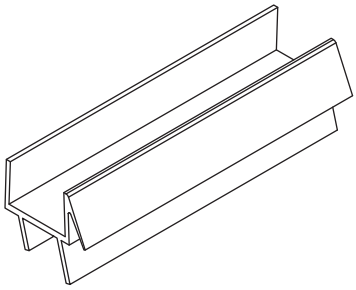

Bottom door seal
x1

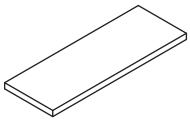

1mm Spacer

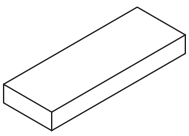

3mm Spacer

Please use this page to find which stay bar your enclosure has been supplied with.

SB1 - With Glass clamp

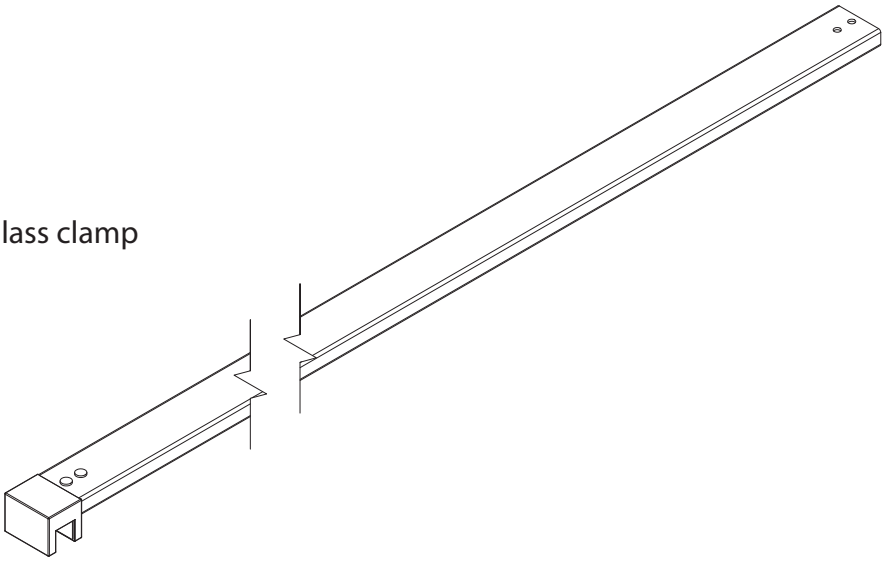

SB7 - With Glass clamp
and T connector

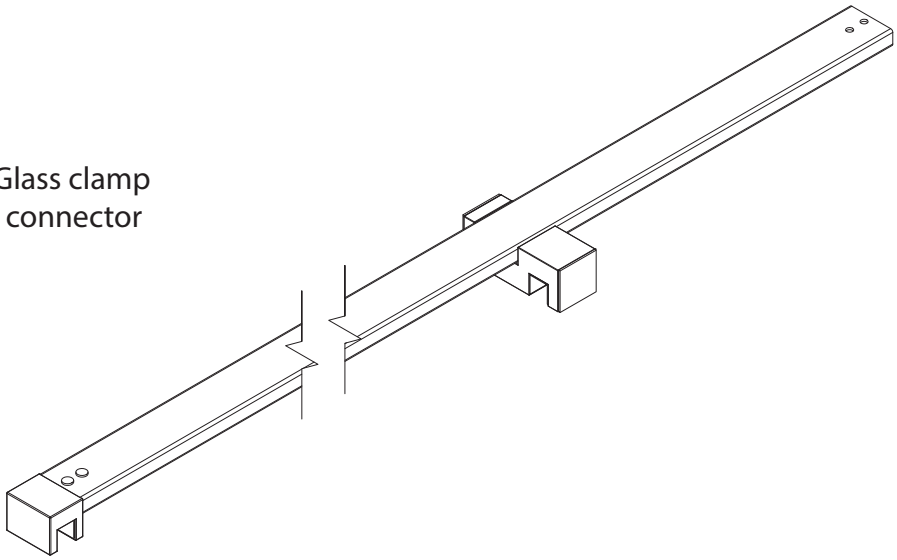

These instructions are for a corner enclosure (Door hinged off wall). This view shows a right handed set up with SB7 stay bar connecting the return and inline panel together, fixed to the wall.

Please use the below diagram to reference the list of parts.

- (A) Return Panel
- (B) Inline Panel
- (C) Door (H1 Handle option shown)
- (D) Glass to Wall Hinge
- (E) Glass to Wall Bracket
- (F) 90° Glass to Glass Bracket
- (G) Handle (Option Dependant)
- (H) Underframe Bottom
- (I) Underframe Top
- (J) Wall Channel
- (K) Glass to Glass Bubble "h" Seal
- (L) Glass to Wall Seal
- (M) Bottom Door Seal
- (N) Stay Bar (SB7 shown)

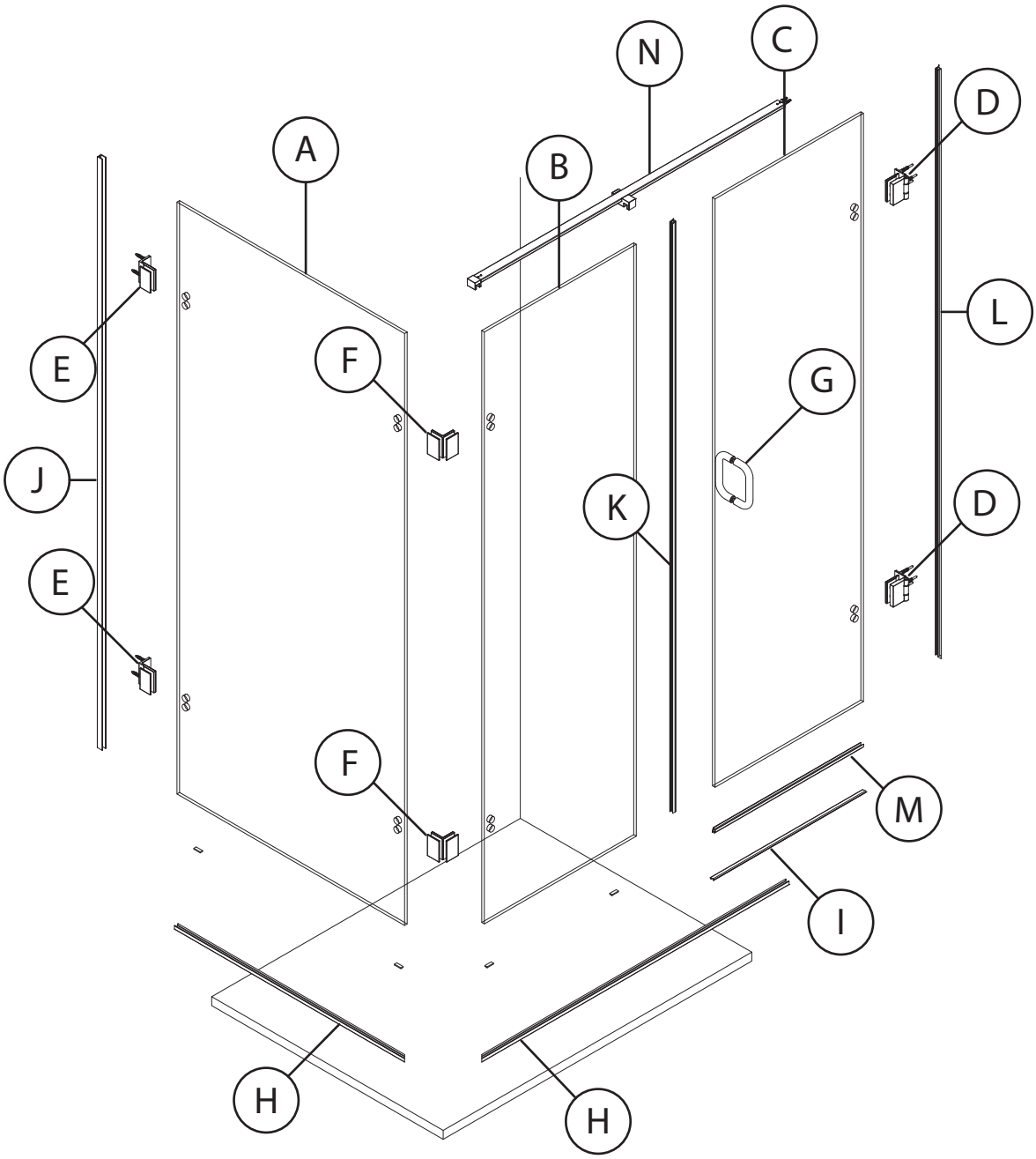

1 Position the underframe using a set square. If using a raised shower tray, leave a recommended 3-8mm gap from the edge of the tray.

Pay attention to the orientation of the underframe.

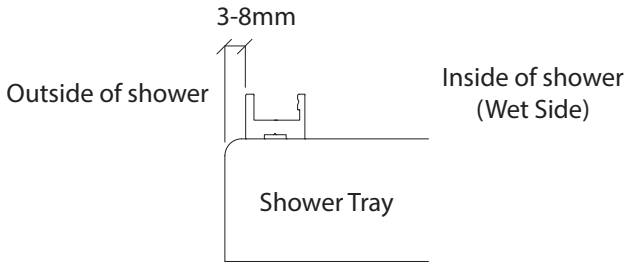

2 Measure the distance from the back wall to the front of the shower tray, take 3-8mm off this measurement (depending on how far back you wish the front underframe piece to sit).

If NOT using a shower tray, measure from the back wall to the place you wish the front underframe to be located. DO NOT remove 3-8mm from this measurement.

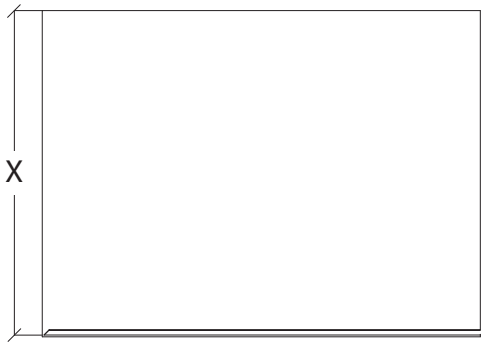

3 Ensure you have the correct piece of underframe. Measure the above distance back from the mitred end (45° end)and mark. Cut squarely with a fine toothed junior hacksaw.

We recommend using masking tape to help.

Repeat for the other underframe piece.

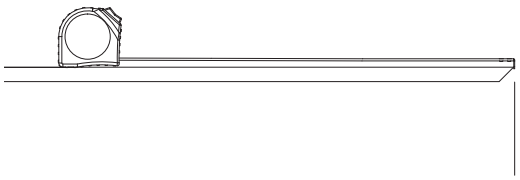

Mitred End

4 Connect the underframe using the 90° underframe connector provided.

You will require a PZ1 screw driver for this step. Not included.

Remove the backing strips from the self adhesive tape and fix firmly to the tray.

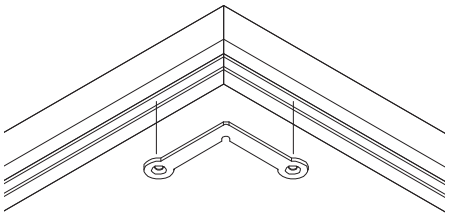

5 Insert the square alignment jig to locate the wall channel. Using a spirit level, ensure the wall channel is vertical.

Mark the pre-drilled holes.

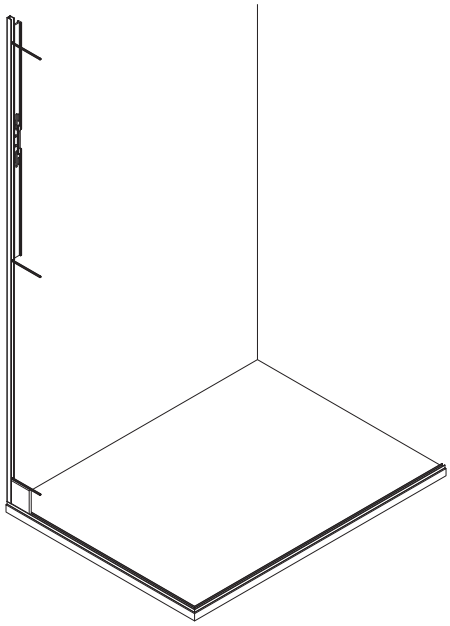

6 Remove the channel.

Using a 6mm high quality drill bit for a clean and precise hole, drill the marked areas, fully insert the wall plugs and fix the channel.

Professional Tip
If drilling ceramic tiles, place masking tape on the tiles before marking and drill through the tape to prevent the drill bit from skidding.

DO NOT use Hammer Action as this will break the tiles.

7 Place spacers into the underframe evenly, as shown below. Begin with the 4mm spacers.

NOTE: There must always be a minimum set of 1mm spacers used under the glass panel.

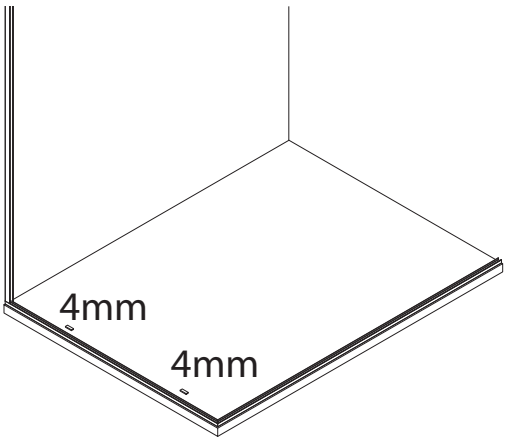

8 Using purpose made “Glass Lifters”, squarely insert the return panel into the wall channel and lower onto the spacers. Take great care NOT to knock the corners as this can cause the panel to shatter.

WARNING
The glass is heavy and may damage the floor or underframe if handled incorrectly. It is advisable to use a suitable non-slip protective mat or piece of carpet. Never rest the glass across the underframe as this may cause damage.

9 Using a spirit level, align the return panel so it is vertical.

Check the top of the panel is level. This can be achieved by adjusting the spacers.

Remember not to stack higher than 5mm. If the distance is greater than 5mm, it may be necessary to adjust the first stack of spacers.

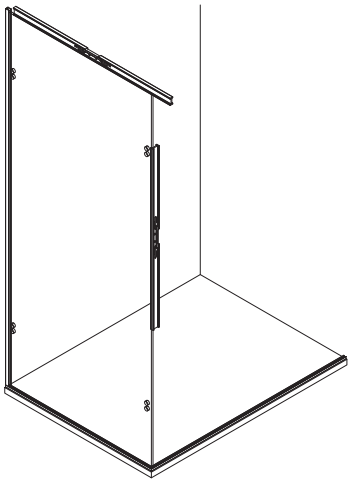

10 Align the return panel so it butts up against the front underframe without any gaps.

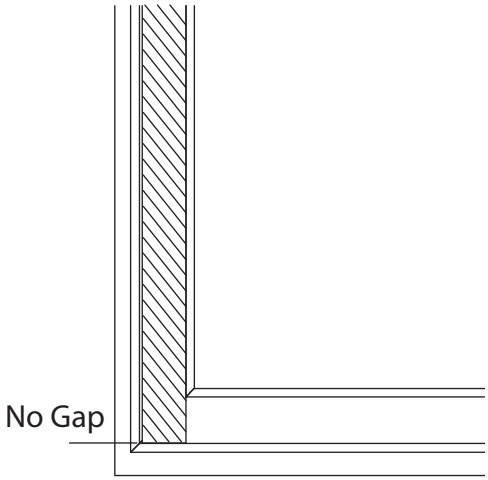

11 Place spacers into the front underframe. Begin with 4mm spacers.

NOTE: There must always be a minimum set of 1mm spacers under the glass panels.

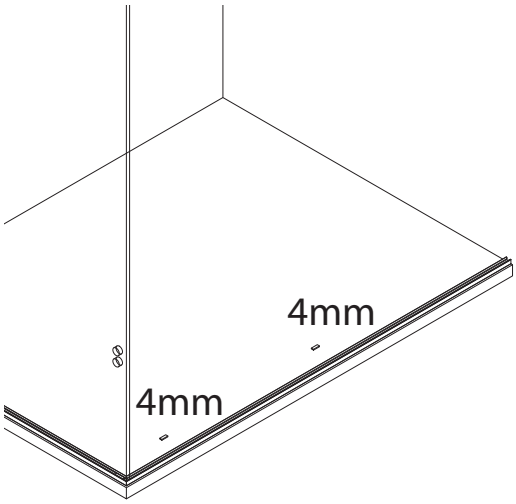

12 Carefully place the inline panel onto the spacers and butt up against the return panel. Check the panel is the correct orientation.

Check that the top of the panels are level. Remember not to stack higher than 5mm.

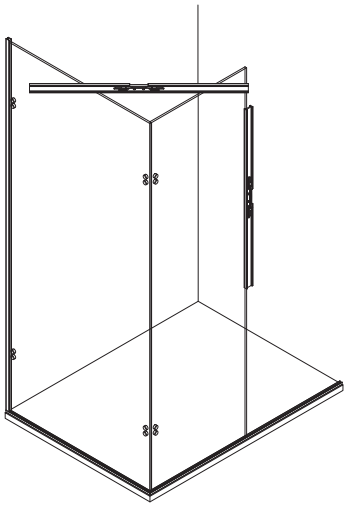

13 Loosely assemble the 90° glass to glass brackets. Evenly tighten the screws until the gaskets are “nipped”.

Tighten all screws to 15.6N.

DO NOT fit the cover plates yet.

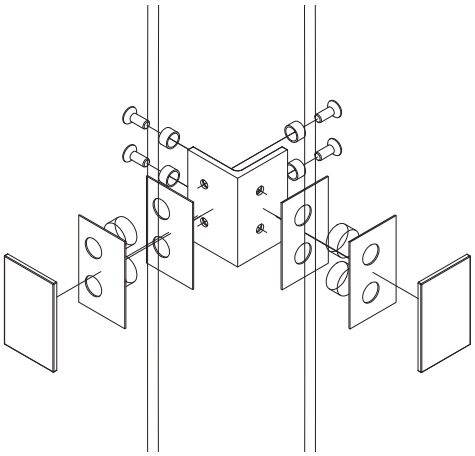

14 Place the door supports evenly over the frame.

Check the orientation against your door direction.

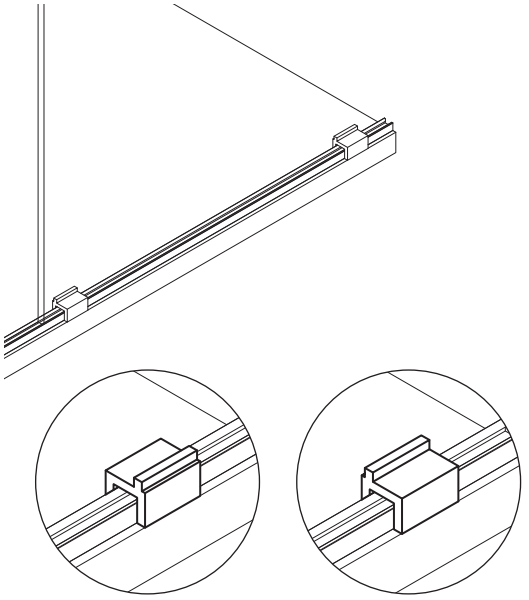

Inward opening Outward opening

15 Loosely assemble the two 90° glass to wall hinges onto the doors. Take note of which way your hinges move.

The face that attaches to the wall should be located inside the enclosure.

Tighten all glass screws to 15.6N.

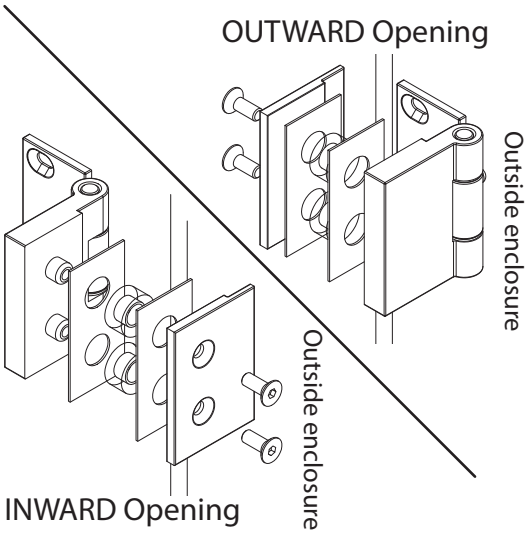

16 With one person inside the enclosure, position the door onto the door supports as indicated.

Using a spirit level, ensure the door is vertical. Use spacers on the door supports to achieve door alignment to the inline panel.

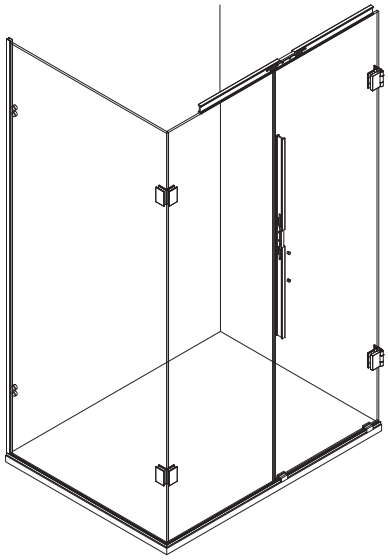

17 First, check there is a gap of 9mm between the edge of glass and tile and a 6mm gap between the door and the inline panel. If this is not achievable, a bespoke door may be necessary.

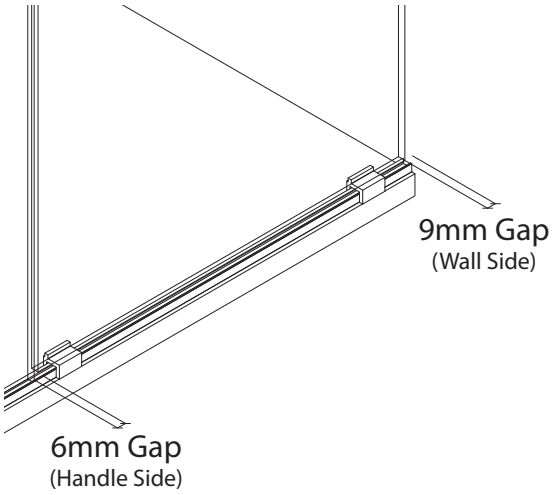

18 Secondly, mark the accessible holes where the hinges will be attached to the wall.

If you have an INWARD opening door, mark all 3 holes.

It is recommended to use masking tape on the tiles to mark.

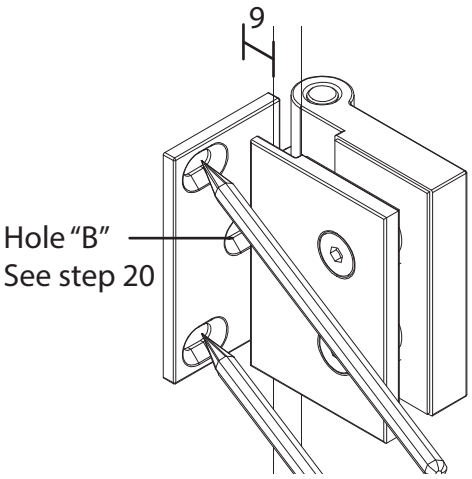

19 Lift the door out and safely put to one side.

If OUTWARD opening, use the template on the last page to locate Hole "B".

Use masking tape on the wall to mark the measurements.

See final page for full scale template

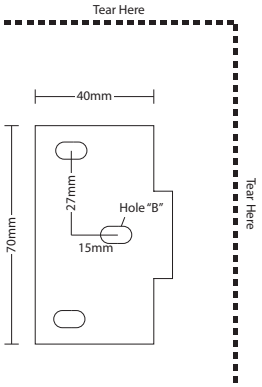

20 Loosely assemble the 90° glass to wall brackets onto the return panel. The face that attaches to the wall should be located inside the enclosure. Ensure the hole centres align.

DO NOT fit the cover plates.

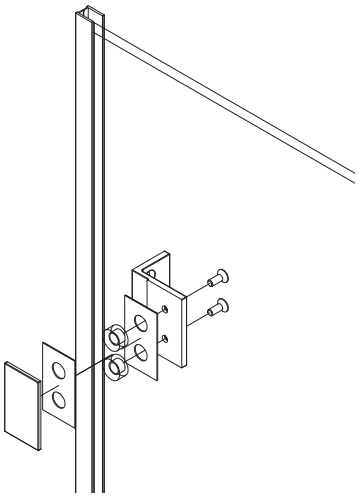

21 Using a pencil, mark the holes where the 90°glass to wall bracket will be attached.

Using masking tape onto the wall to mark your measurements.

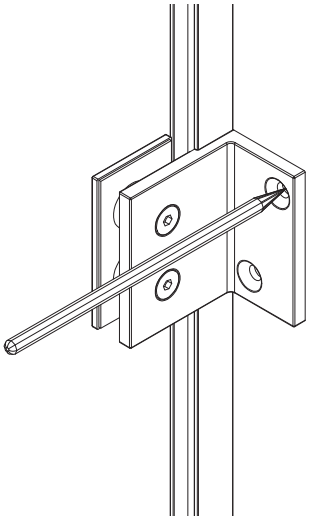

22 Using a straight edge, mark where the wall channel needs to be trimmed above the glass panel.

To protect the channel finish, it is recommended to mark on masking tape.

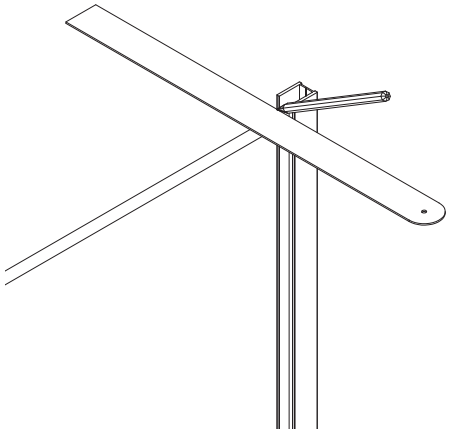

23 Carefully seperate the two panels. Leaving the brackets on the panels, lift the glass out and put to one side.

Note and leave the spacers in the base channels.

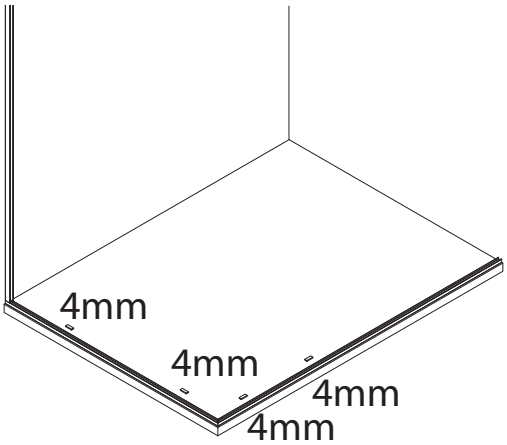

24 Carefully remove the wall channel and trim using a fine toothed junior hacksaw.

Use a fine file to remove any burrs.

Be careful not to damage the channel finish.

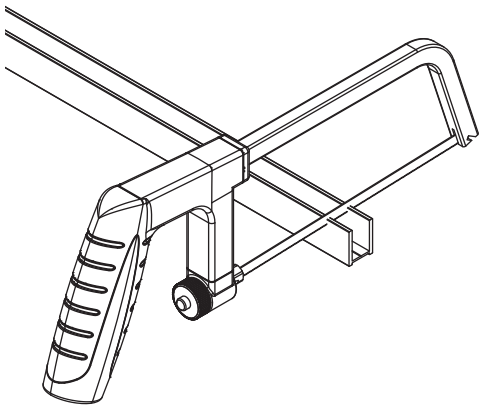

25 Using a 6mm high quality drill bit for a clean and precise hole, drill the marked areas and fully insert the wall plugs.

26 Reattach the wall channel in its previous position, this time use silicone sealant as indicated. Run a bead of silicone sealant down the back face to create a water tight seal.

Professional Tip
If drilling ceramic tiles, place masking tape on the tiles before marking and drill through the tape to prevent the drill bit from skidding.

DO NOT use Hammer Action as this will break the tiles.

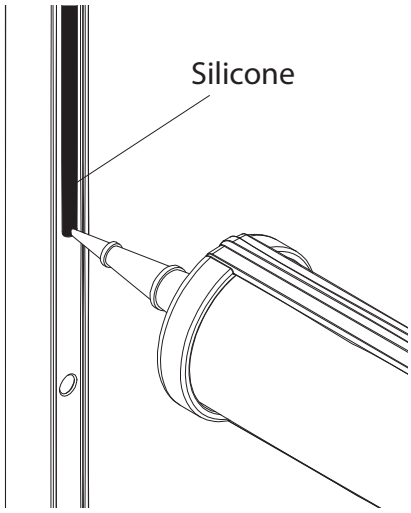

27 Run beads of silicone sealant down the inside walls of the channel as shown.

Do not run too larger beads or fill the channel with silicone.

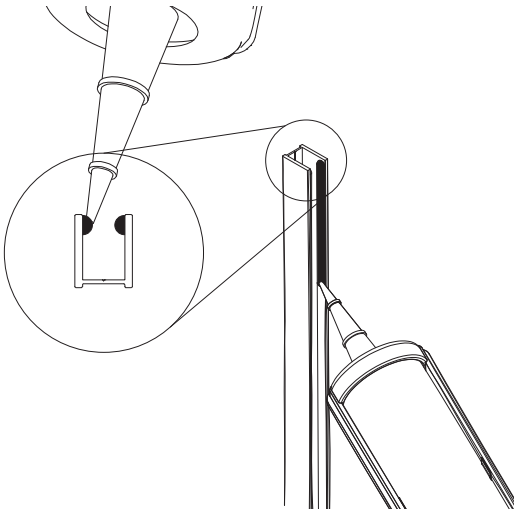

28 It is very important to put a good amount of silicone in the corner where the wall channels meet the underframe. This area needs to be properly sealed to prevent any water leakage.

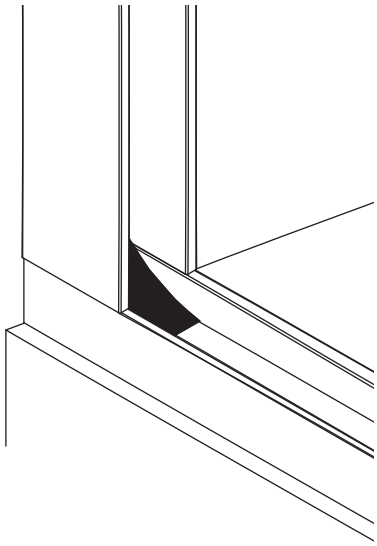

29 Check the spacers are in their noted positions.

Carefully lower the return panel back into the channels and onto the spacers.

Ensure there is no gap at the front of the under-frame.

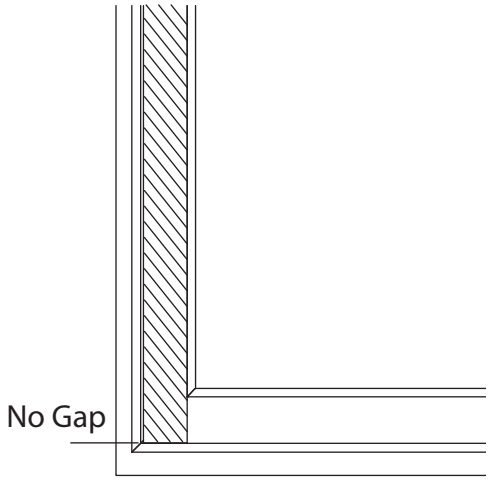

30 Screw the brackets to the walls.

Evenly tighten the screws until the gaskets just “nipping” the glass.

Tighten all glass screws to 15.6N.

DO NOT fit the cover plates.

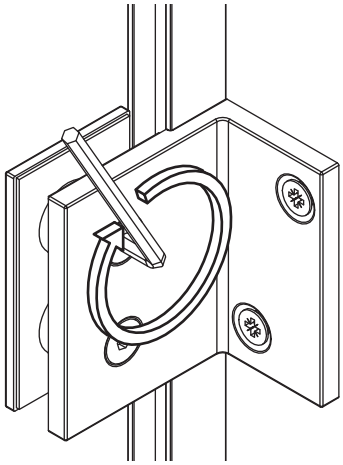

31 Check the spacers are in their noted positions.

Carefully lower the inline panel back into the channel and onto the spacers.

Ensure the panel is pushed tight against the return panel.

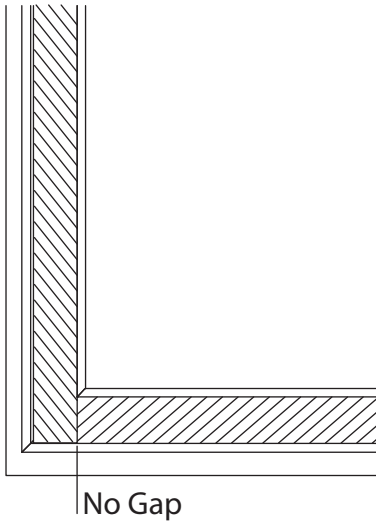

32 Assemble the 90° glass to glass brackets back onto the panels. Evenly tighten the screws until the gaskets are “nipped”.

Tighten all screws to 15.6N.

DO NOT fit the cover plates yet.

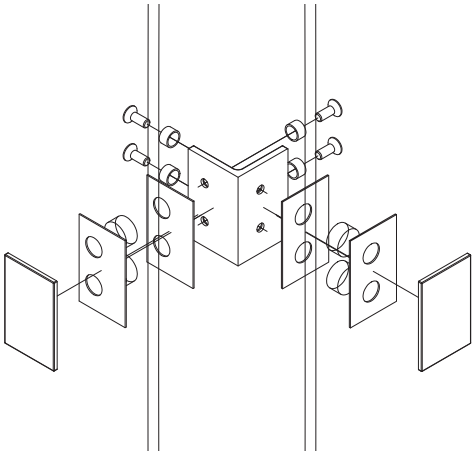

33 Ensure the door supports are still in place.

Carefully lift the door back into position and securely attach the hinges to the wall. Make sure the screws are flush with the bracket face.

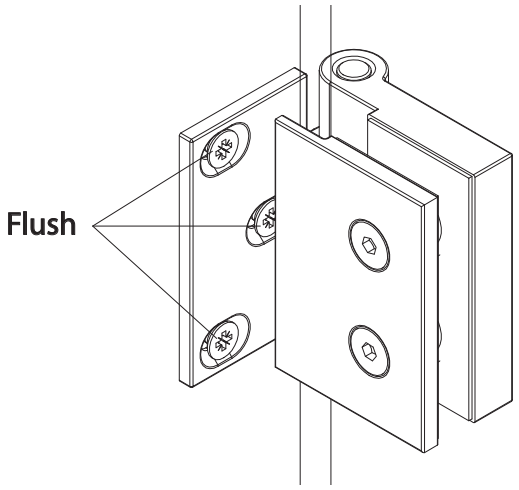

34 Attach the Glass to Wall “h” seal to hinged edge of the door.

Check the orientation is correct.

Leave the seal oversized. This will be trimmed later.

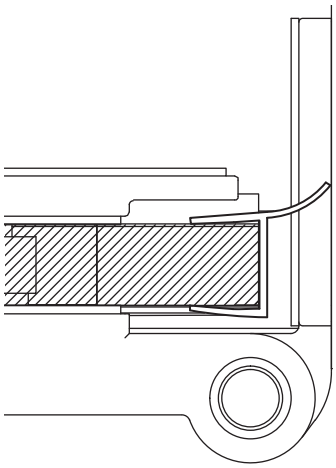

35 Attach the glass to glass bubble “h” seal to the inline panel.

Check the orientation is correct.

Leave the seal oversized. This will be trimmed later.

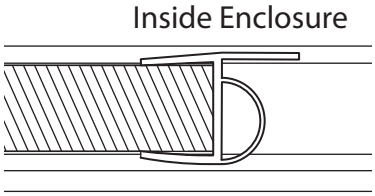

Open Out

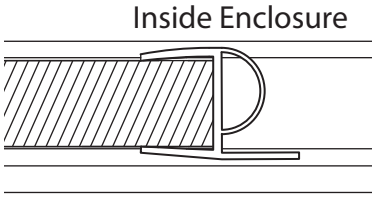

Open In

36 From the inside, fully tighten all screws.

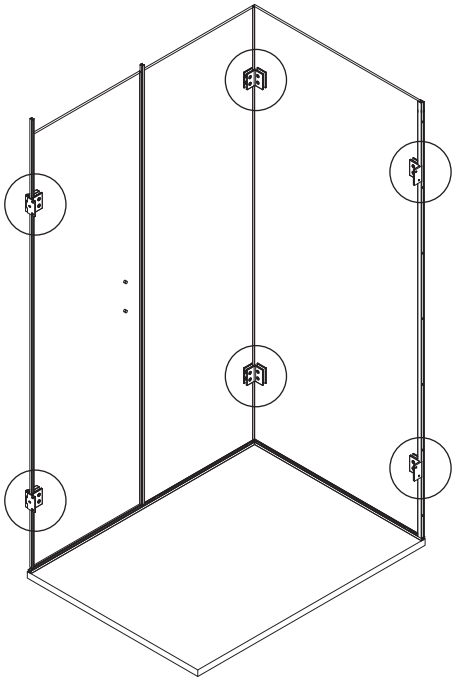

37 Check which stay bar configuration your screen has been supplied with and refer to the relevant instructions below.

(You can find this out at the front of these instructions).

Config A - SB1 Page 09

Config B - SB7 Page 12

Stay Bar Configuration A - SB1

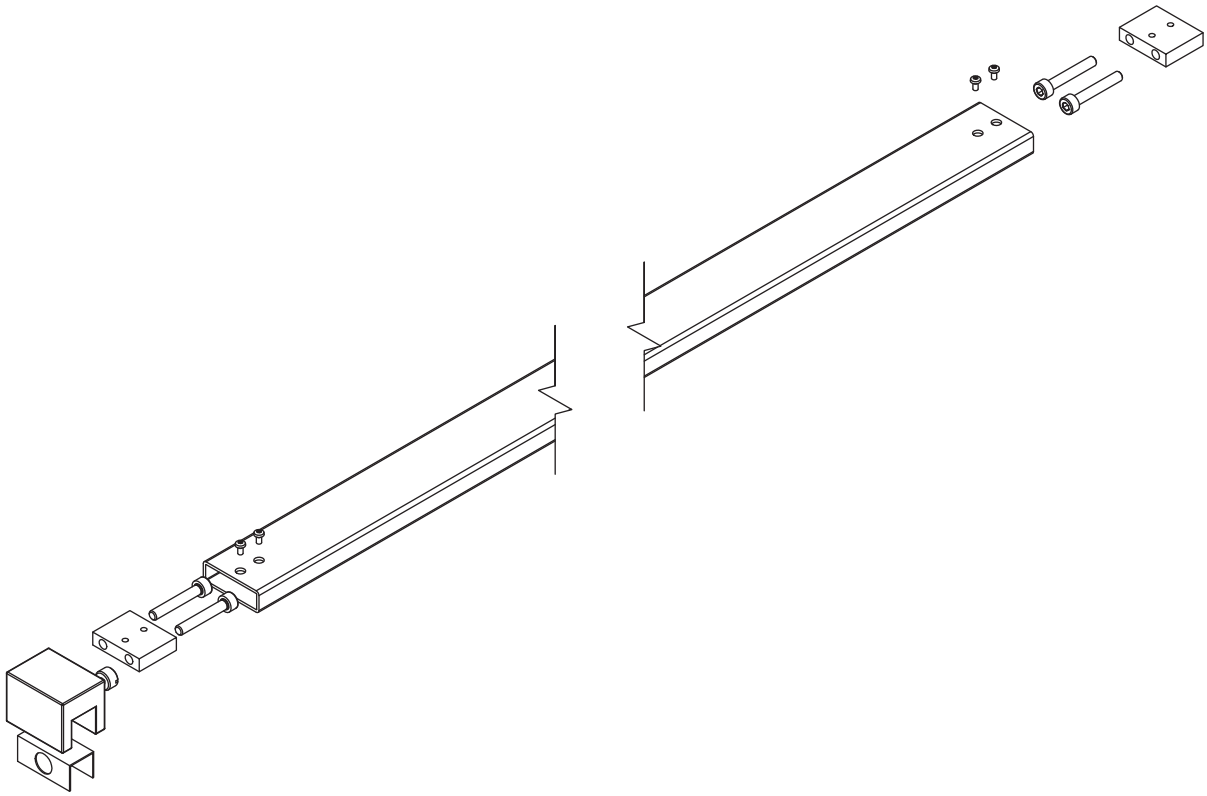

A1 Measure the distance from the inside face (wet side) of the return panel to the wall opposite. Ensure this measurement is truly horizontal. Subtract 6.5mm to get your final dimension.

A2 Mark the final dimension on the stay bar tube, wrapped with some masking tape. Carefully use a fine toothed junior hacksaw and fine file to cut and finish the edge.

DO NOT discard the off cut.

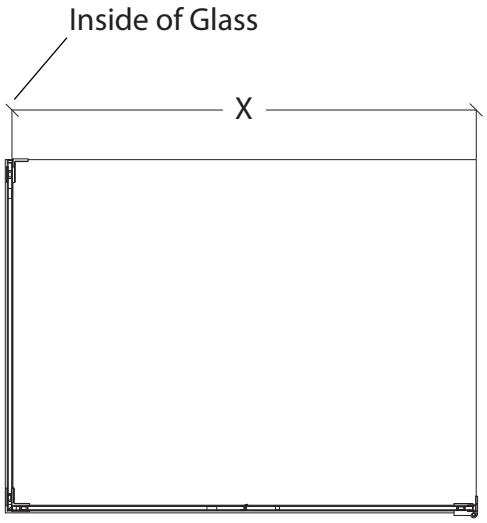

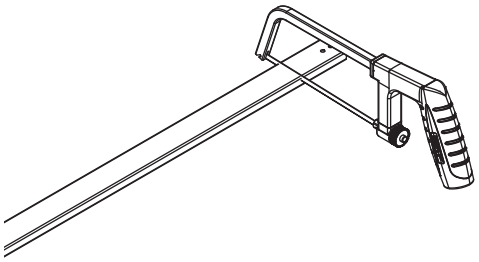

A3

Align the off cut to the new end.

Use a set square to locate the new holes.

With a 4mm drill bit, carefully drill through one side of the stay bar tube.

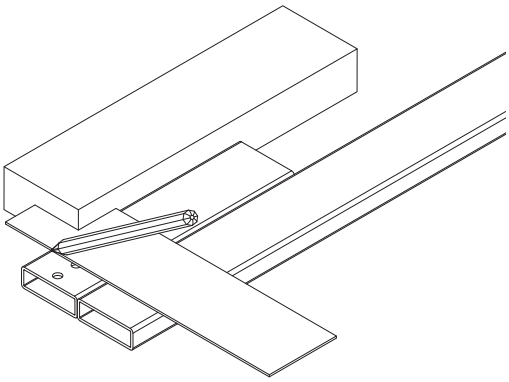

A4

Assemble the glass clamp to the stay bar as shown.

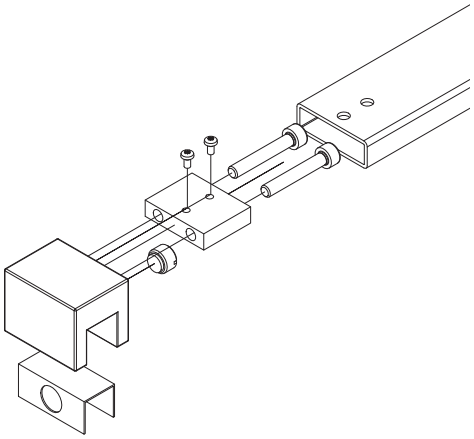

A5

Secure the glass clamp over the return panel making sure the glass is fully inserted into the groove about 15mm from the end of the glass.

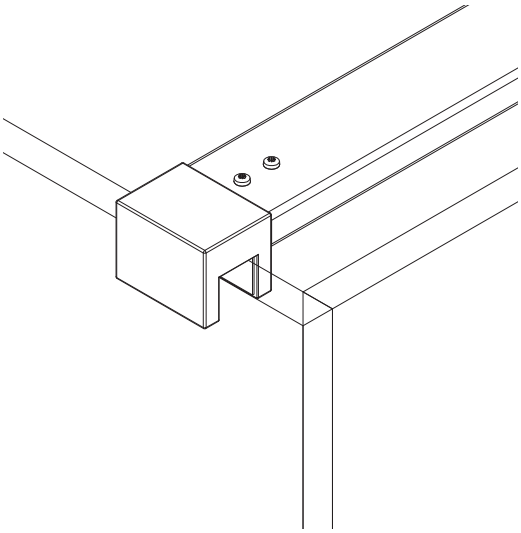

A6

Ensure the stay bar is square and level.

Mark the end location on the wall.

Remove the stay bar.

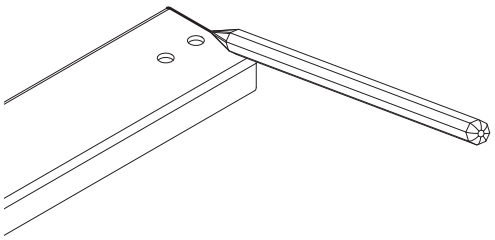

A7

Position the stay bar connectors central to the markings. With a small drill bit mark the holes for drilling.

Use masking tape on the tiles to mark.

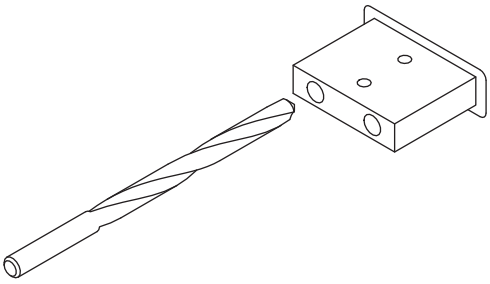

A8

Using a 5mm high quality drill bit for a clean and precise hole, drill the marked areas, fully insert the wall plugs and fix the connectors to the wall.

Professional Tip
If drilling ceramic tiles, place masking tape on the tiles before marking and drill through the tape to prevent the drill bit from skidding.

DO NOT use Hammer Action as this will break the tiles.

Stay Bar Configuration B - SB7

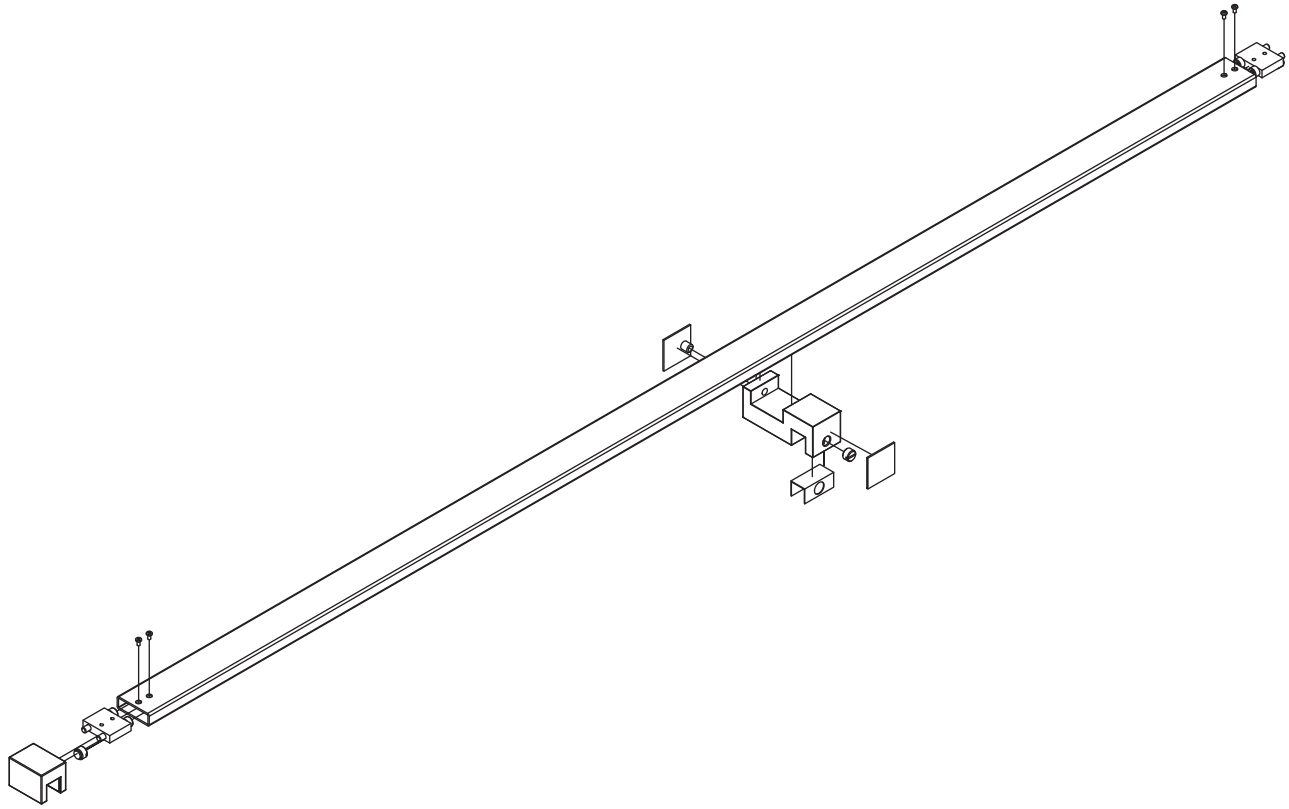

B1

Follow steps A1-A4.

Secure the T Connector to the inline panel as shown.

B2

Secure the stay bar to the return panel, ensuring the glass is fully inserted into the clamp.

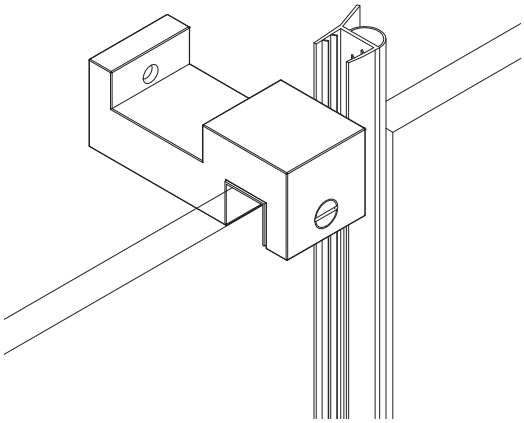

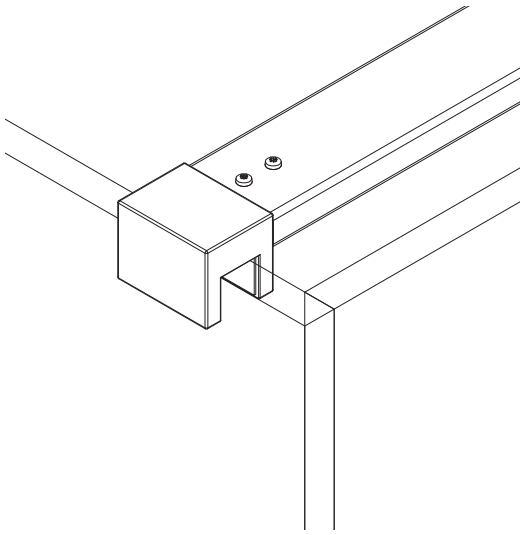

B3

Ensure the stay bar is square and level.

Mark the end location on the wall.

Remove the stay bar.

B4

Position the stay bar connector central to the markings. With a small drill bit mark the holes for drilling.

Use masking tape on the tiles to mark.

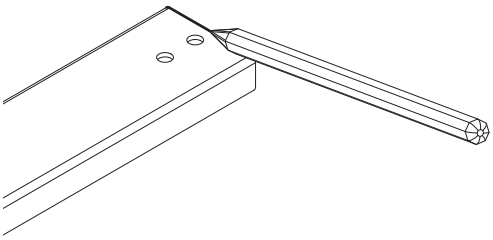

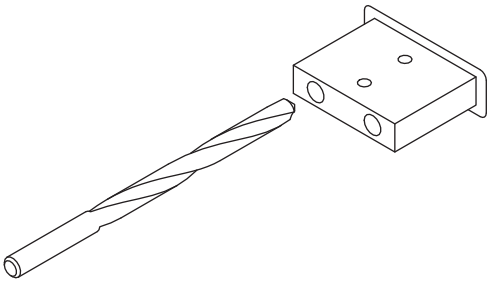

B5

Using a 5mm high quality drill bit for a clean and precise hole, drill the marked areas, fully insert the wall plugs and fix the connector to the wall.

Professional Tip
If drilling ceramic tiles, place masking tape on the tiles before marking and drill through the tape to prevent the drill bit from skidding.

DO NOT use Hammer Action as this will break the tiles.

38 Screw the stay bar to the wall connector using the grub screws provided.

Reassemble the stay bar onto the return panel and securely tighten all fixings.

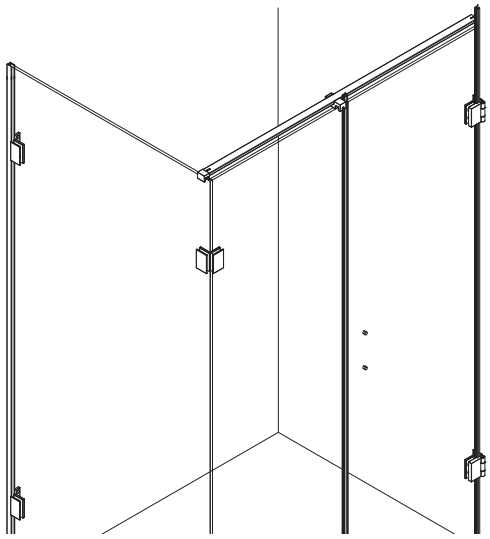

39 Measure the distance between the inline panel and the tile.

Mark and cut the underframe top.

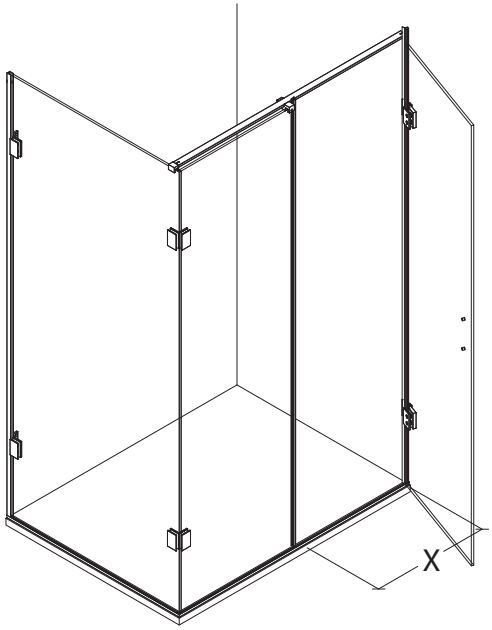

40 Run a small bead of silicone on the inside edge of the underframe and push the top firmly into position.

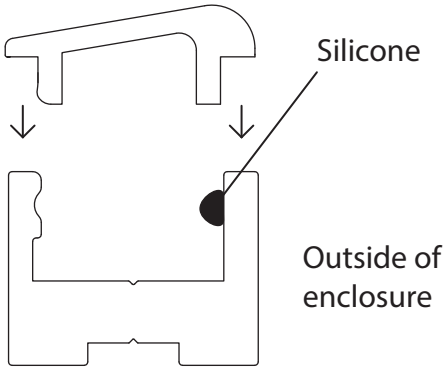

41 Measure the width of the door (glass width). Cut the bottom door seal accordingly.

Notch the inside edge on the handle side of the door to allow the soft tail of the vertical seal to touch the glass.

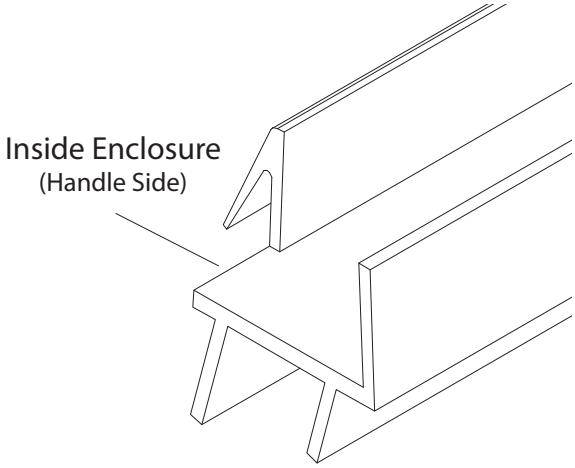

42 Attach the bottom door seal so the deflector fin is on the inside.

Check orientation below.

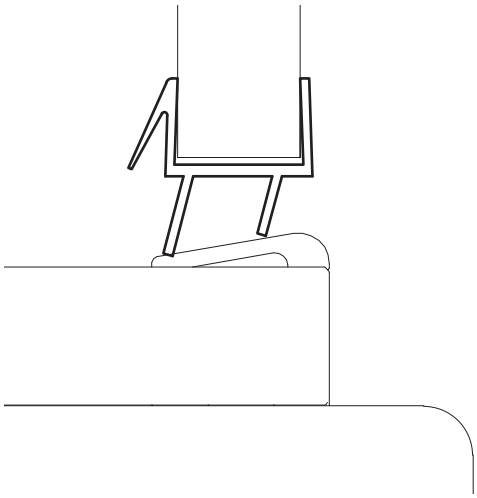

43 Check the glass to wall seal orientation and trim a notch to fit around the bottom door seal.

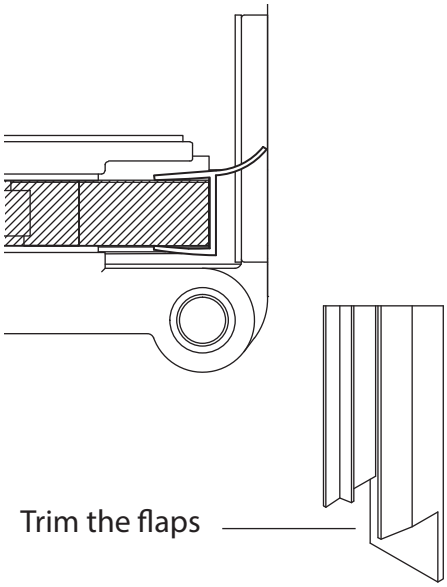

44 With a straight edge, mark where the seals will be trimmed at the top and where to cut the notch around the bottom door seal.

Remove the seals and trim with a fine toothed junior hacksaw so they are flush with the tops of the panels.

Replace the seals.

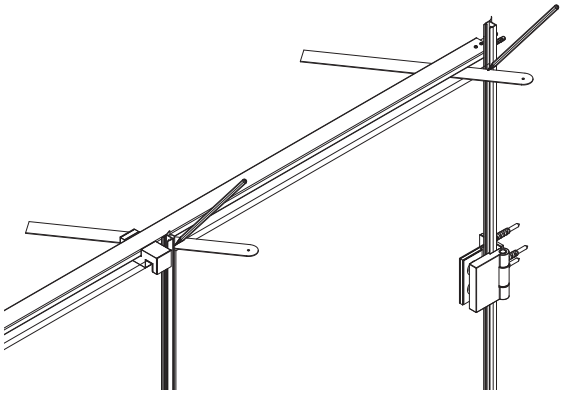

45 With a sharp modelling knife, cut the glass to wall seal tail above and below the 90° glass to wall hinges as shown.

Take care to get these cuts as close to the hinges as possible to allow the seal to flex around the hinge without leaking.

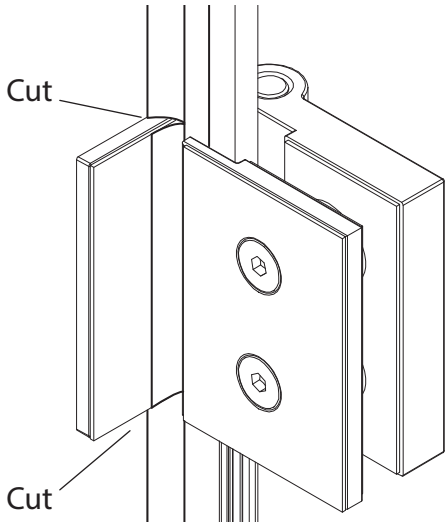

46 Using a sharp modelling knife, trim any excess gasket material from the hinges that may have squeezed out when tightening. Take care not to scratch the glass surface.

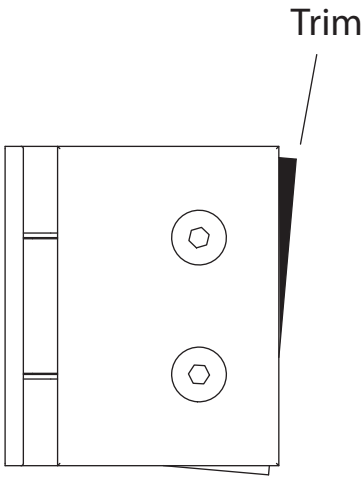

47 Attach the handle if one is included. Secure in place with the grub screws provided. The handle should be oriented so that the grub screws are not visible when looking down on the handle.

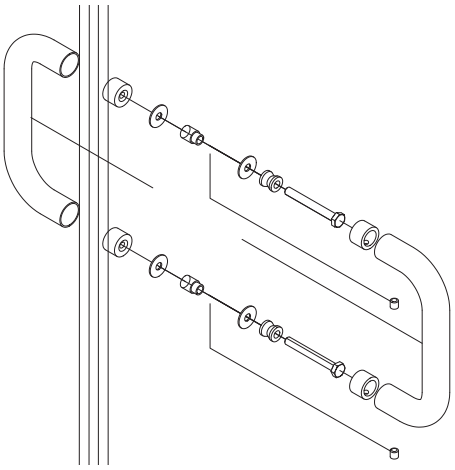

48 Fit all cover plates.

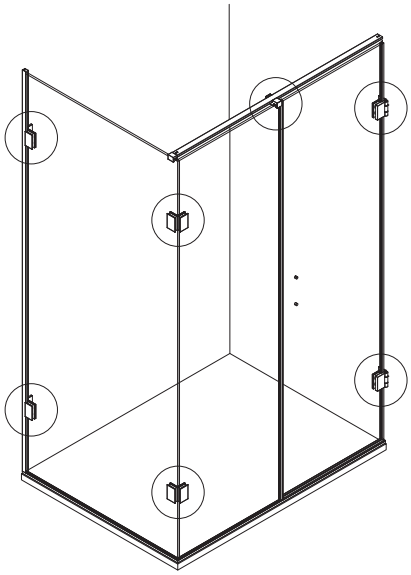

49 IMPORTANT: Apply silicone sealant as shown below to where the fixed panels meet the underframe on both sides, between the underframe and the shower tray (or tiles), over the underframe top on both ends and the wall channels and wall, both inside and out.

This enclosure is NOT water tight unless this step is followed.

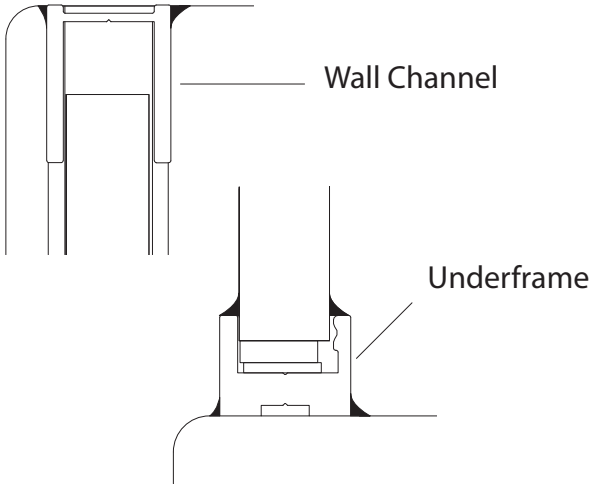

50 IMPORTANT: Run a fillet of silicone down the join between the inline panel and return panel on the inside (wet side) of the screen.

This screen is NOT water tight unless this step is followed.

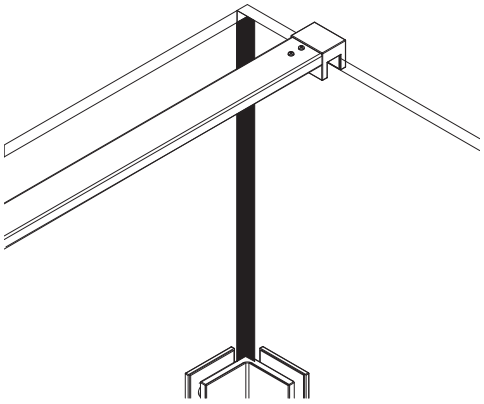

51 Check the silicone has been applied to all the below inside areas.

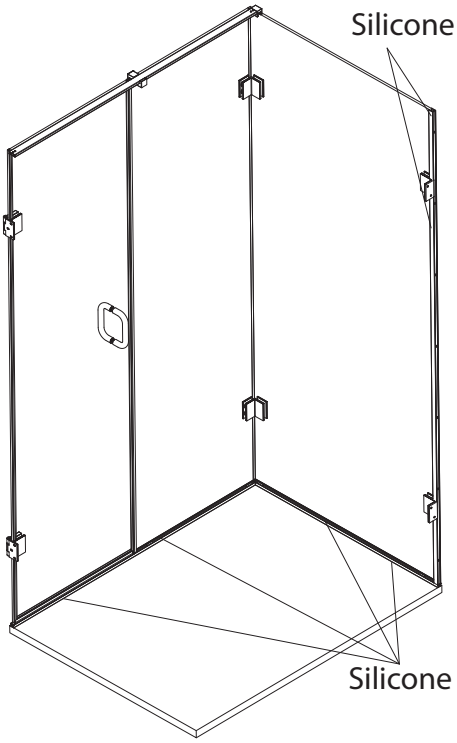

53 Check silicone has been applied to all the below outside areas.

Let enclosure cure for 48 hours.

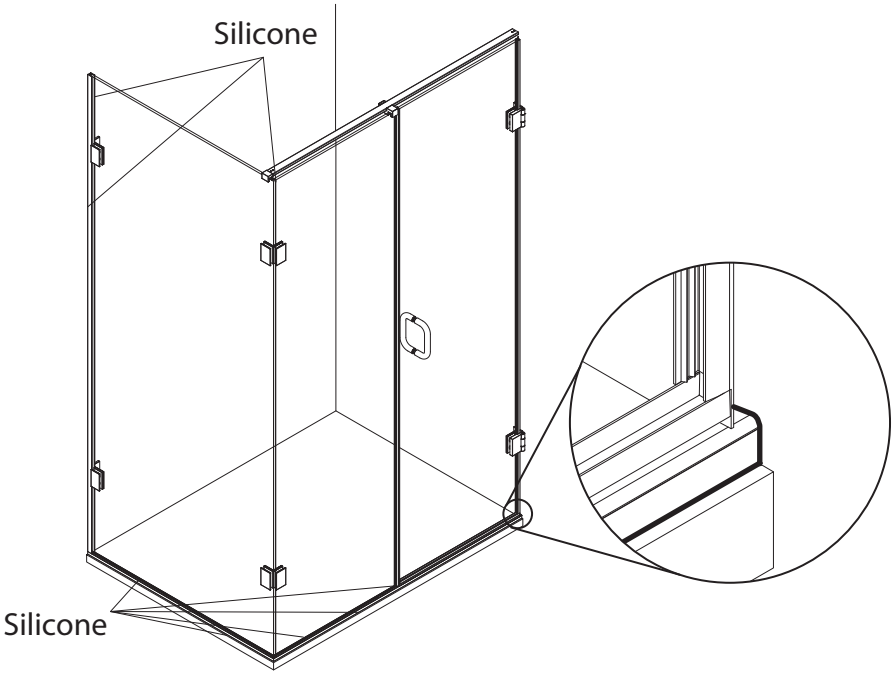

Please use this template to locate Hole "B" if your screen opens OUTWARDS from the wall.